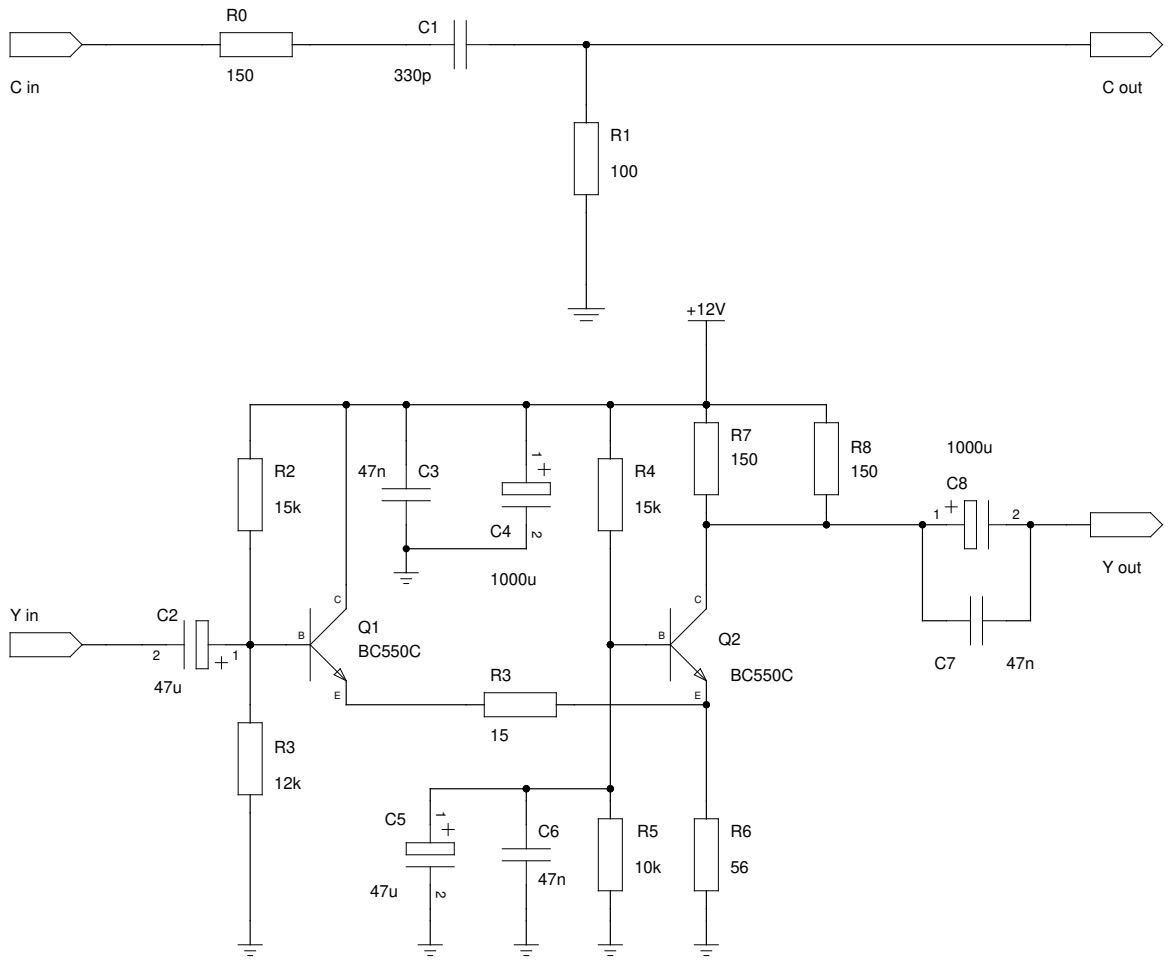

TITLE	Y/C Ausgang für Philips N1700/1702 Videorekorder		
FILE:	n1700yc_2.sch	REVISION:	1.0
PAGE	1 OF 1	DRAWN BY:	Stefan Heimers